SERIES

5121

16P I/O コネクタ
16P I/O Connector

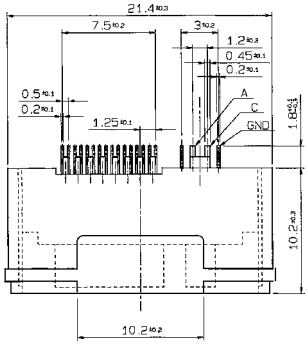

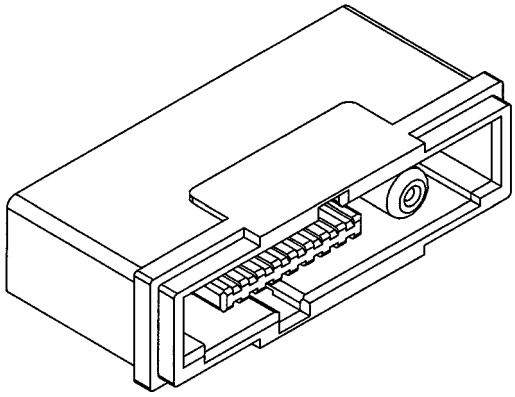

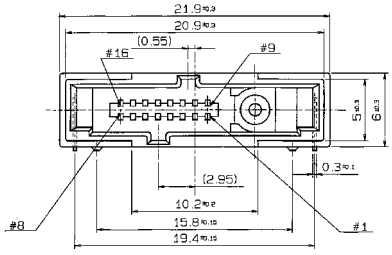

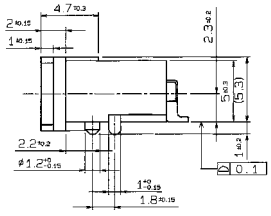

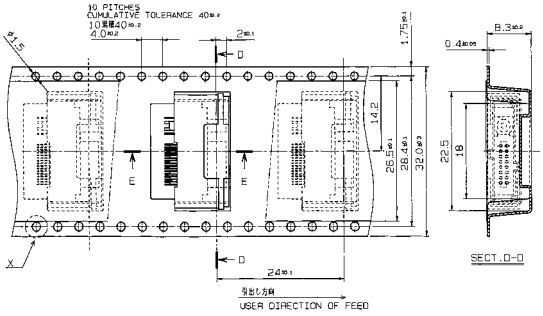

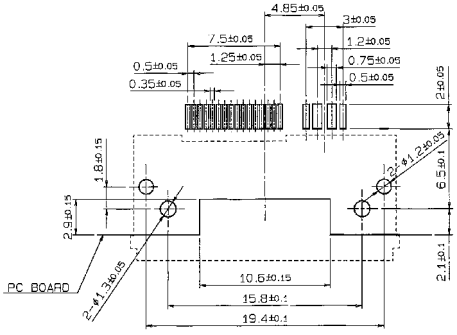

RECOMMENDED PC BOARD LAYOUT

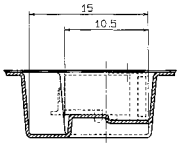

SECT.E-E

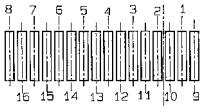

POSITION No.

注文コード/Ordering Code

Part No.	24	5121	016	001	871